USER MANUAL
CEILING-MOUNTED DEHUMIDIFIER

Model: DeAir.RE-150CL



This product is manufactured and distributed by DeAir Joint Stock Company.

deair.com.vn 0925 977 579

Table of Contents

1. General Safety Warnings 1
2. Electrical Safety 1
3. Installation Location Requirements (Ceiling-Mounted Unit) ... 1
4. Operation and Maintenance 2
5. Technical Specifications 2
6. Installation Instructions 3
   - 6.1. Preparation 3
   - 6.2. Starting the Installation 3
7. Settings 4
8. Operation and Storage Notes 5
   - 8.1. Operating Mechanism and Environment: 6
   - 8.2. Auto Defrost Mode: 6
   - 8.3. Maintenance and Cleaning: 6
   - 8.4. Important Warnings for Transport & Installation 6
9. Errors and Troubleshooting 7
   - 9.1. On-Screen Error Codes 7
   - 9.2. Troubleshooting 7
10. Maintenance 8

Thank you for choosing our product! This user manual is essential for the installation, operation, and maintenance of the equipment. Please follow all instructions in this manual to maximize dehumidification efficiency, troubleshoot potential issues, and extend the lifespan of the unit.

PRODUCT REGISTRATION

Record the serial number of the dehumidifier in the space provided below for future maintenance reference.

Serial Number: ----------

IMPORTANT: Please keep a copy of your sales invoice and warranty card for DeAir warranty service.

WARRANTY POLICY

The warranty period is 24 months from the date of purchase.

The warranty is limited to the free replacement of any defective parts or manufacturing defects that occur within the warranty period.

All warranty claims must specify the model / serial number. These details are printed on the unit's identification nameplate.

Read all instructions in this manual before using this dehumidifier. To reduce the risk of fire, electric shock, or personal injury when using the dehumidifier, follow basic safety precautions.

In the event of any fault or damage to the product, please contact DeAir immediately at:

Hotline: 0914 242 708 - 0911 989 708

1. General Safety Warnings

- Read the user manual carefully before operating and keep this document for future reference.
- This equipment is designed for commercial, light industrial, or professional users; children and unauthorized persons must not operate it on their own.
- If you detect a burning smell, abnormal noise, or unusual vibration, disconnect the power supply immediately.

2. Electrical Safety

- Use only a standard 220–240V/50Hz AC power supply. Ensure the power voltage matches the specifications on the equipment rating label.
- The power outlet and the machine casing must be safely grounded (earthed) and securely fixed.
- Do not use adapters, multi-outlet power strips, or extension cords to connect the equipment.
- Do not unplug the unit by pulling on the power cord. If the power cord is damaged, it must be replaced by the manufacturer or a qualified professional technician.
- Disconnect the power supply when not in use for an extended period or before cleaning and maintenance.

3. Installation Location Requirements (Ceiling-Mounted Unit)

- The unit must be securely suspended/mounted and properly leveled to bear the load and prevent vibration.
- **Technical clearance:** Install the machine at least 30cm away from walls, and keep the side panel (circuit board / access panel side) at least 50cm away from obstacles to ensure proper airflow circulation and workspace for maintenance technicians.
- Do not block the air inlet (Return Air) and air outlet (Supply Air). Never allow objects to obstruct the airflow.
- Do not install the machine near heat sources (heaters), in areas with chemicals or acids, or in locations directly exposed to sunlight, rain, or storms.

- The drainage pipe must be installed with an appropriate downward slope, free from bends, kinks, or compression, so that water drains naturally (preventing backflow onto the ceiling).
- Do not discharge water into areas with extremely low temperatures (which may cause freezing and pipe blockage).

4. Operation and Maintenance

- Do not operate the machine when ambient humidity is below 30% (to protect the equipment and save energy).
- Regularly inspect and clean the dust filter at the air inlet. Ensure the machine and power supply are free from heavy dust accumulation.
- All repair work and technical interventions must be performed by qualified professionals.

5. Technical Specifications

Model	DeAir.RE-150CL
Dehumidification Capacity @30°C-80%RH	150L/D
Airflow	1500 CMH
Power Supply	220V/1Ph/50HZ
Power Consumption	1.73kW
Operating Temperature	15-40°C
Refrigerant	R410A
Noise Level	57dBA
Weight	61KG
Dimensions	965x650x650mm

6. Installation Instructions

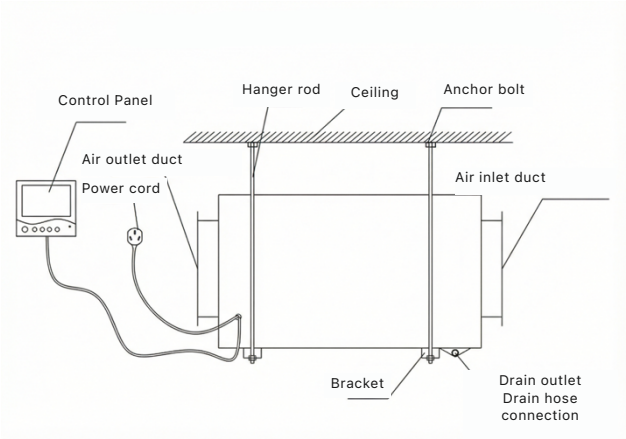

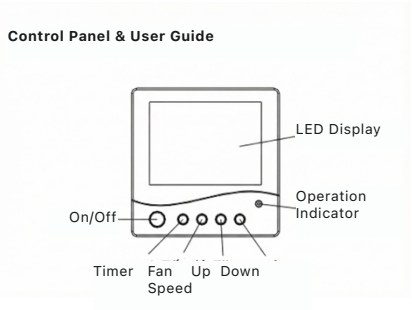

6.1. Preparation

- Perform all necessary safety precautions; the entire installation process must be carried out with the power turned off.
- Ensure that the installation site has the required power supply and water drainage channels.
- Prepare the necessary tools, such as screwdrivers, a hoist/lifting device, nuts, wrenches, and other tools.

6.2. Starting the Installation

Drill holes in the ceiling matching the positions of the four mounting holes on the dehumidifier frame. The hole size is determined by the expansion bolts purchased by the customer. After drilling the holes, insert the expansion bolts and secure the suspension rods. For this step, refer to the top view of the machine:

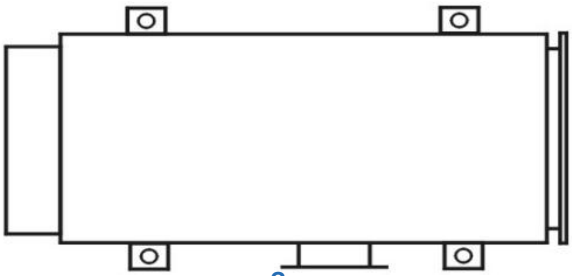

Top View

Insert the four fixed suspension rods into the four corresponding mounting holes of the unit and adjust the lifting height according to actual site conditions to ensure that the suspended unit is completely horizontal, as shown below:

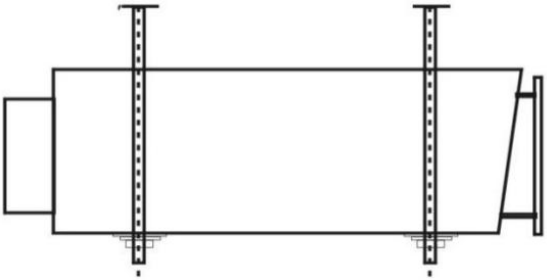

Side View

Connect the drainage channel: our company only provides the drain outlet on the unit; the specific piping material and length of the water pipe are determined by the user to ensure there is no water leakage or pipe blockage.

Connect the power supply: please ensure that the voltage is 220V / 50Hz and that a power source with overcurrent protection is provided.

7. Settings

1. Press the M button briefly; the small house icon lights up for ventilation mode.

2. Press and hold the M button for 10 seconds to display the defrost sensor temperature, which is the coil temperature.



3. Press and hold the M button for 15 seconds to enter factory settings mode:



F1-01 Humidity calibration



F1-02 Defrost interval



F1-03 Defrost duration



F1-04 Defrost time

- S button settings:
- Press the Set (S) button once to configure the timer switch.
- Indicator ON: turns the timer ON / turns the timer OFF.
- Indicator OFF: sets the OFF timer while the timer is active.
- Press and hold the S button for 10 seconds to set the clock time.

8. Operation and Storage Notes

8.1. Operating Mechanism and Environment:

- **Protective delay mode:** After powering on, the compressor will delay starting for **3 minutes** to protect the refrigerant pressure system and motor.
- **Operating temperature range:** The dehumidifier operates most effectively in an ambient temperature between **+15°C and +32°C.**
- **Airflow circulation clearance:** Ensure a safe clearance is maintained with no obstacles in front of the air inlet (Return Air) and air outlets (Supply Air) for optimal airflow circulation.

8.2. Auto Defrost Mode:

- When the ambient temperature drops low (typically below 18°C), the evaporator coil may frost over. The unit will automatically activate the defrost mode.
- **Working principle:** During this process, the compressor temporarily stops operating, while the fan continues running to melt the frost on the evaporator coil.
- **Indication:** The **'Defrost'** icon and **'FAN'** indicator light on the control screen will flash. Once defrosting is complete, the unit will automatically return to normal dehumidification mode.

8.3. Maintenance and Cleaning:

- **Filter cleaning:** Remove and clean the dust filter periodically **once a month.** Rinse gently with clean water (warm water below 40°C may be used) and let it dry completely before reinstalling.

8.4. Important Warnings for Transport & Installation

- **Permissible tilt angle:** During transport or when lifting the machine to the ceiling for installation, **never tilt the machine more than 45 degrees.** This prevents compressor oil from flowing backward into the refrigerant pipes and damaging the compressor.
- **Handling excessive tilting:** If the unit is accidentally tilted excessively or overturned during transport, place the unit upright on a level surface and **leave it stationary for at least 12 hours** before powering it on (to allow the compressor oil to drain back into place).

9. Errors and Troubleshooting

9.1. On-Screen Error Codes

ERROR	REASON / DESCRIPTION
E1	Defrost temperature sensor error
E2	Humidity sensor error
E6	Phase loss protection
E7	Phase sequence protection
E8	Compressor protection
E9	Communication error

9.2. Troubleshooting

PROBLEM	CAUSE	SOLUTION
Dehumidifier does not operate	• The unit has no power supply. • The power plug is not plugged in properly.	• Turn on the power supply. • Plug in the power cord properly.
Poor dehumidification performance	• The air filter is dirty. • The air inlet or outlet vent is covered/blocked. • The room is not sealed. • Low ambient humidity and temperature.	• Clean the air filter. • Open/clear the air inlet and outlet covers. • Close all doors and windows tightly. • The lower the room temperature, the lower the dehumidification efficiency.
High noise level	• The unit is not placed on a flat, level surface. • The incoming or outgoing airflow is blocked.	• Place/mount the unit on a flat, level surface. • Open/clear the air inlet and outlet covers.

10. Maintenance

CLEANING THE AIR FILTER (every two weeks)

The air filter can be easily removed for cleaning. Do not operate the machine without the air filter, as the evaporator may become contaminated.

- Wipe the machine clean with a soft, damp cloth.
- Remove the filter cover to take out the filter.
- Remove the filter mesh from the unit.
- Use tap water to rinse the filter clean. Let the filter dry completely before placing it back into the machine. Regular filter cleaning increases the efficiency and capacity of the unit.

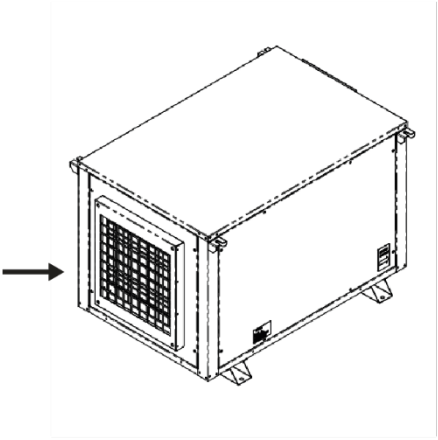

Figure 1: Turn off the unit and remove the air filter

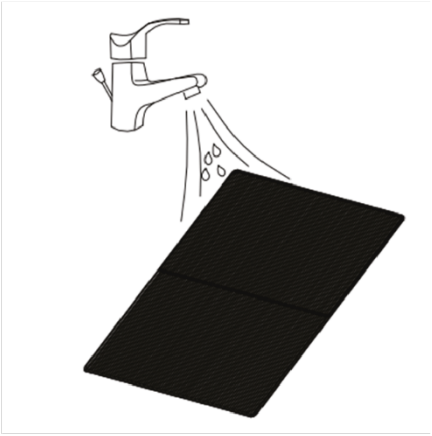

Figure 2: Wash the air filter under running tap water

Warning: Do not touch the surface of the evaporator with bare hands to avoid injury to your fingers.

ATTENTION!

- The machine is suitable for temperatures of 15°C ~ 40°C; ensure it is grounded during operation.
- To avoid damaging the machine when moving it, do not tilt the dehumidifier more than 45°.

- For continuous water drainage, position the drain pipe at a downward angle of 5° or greater relative to the horizontal plane, and not higher than the drain outlet.
- Before repairing or cleaning the machine, make sure the power supply is turned off.
- Do not use chemicals, volatile solvents, or corrosive solutions to clean the machine.
- Do not wash the machine with water hotter than 40°C, as the machine surface will fade and become damaged.
- Use a soft, clean cloth to wipe the machine dry. If the exterior of the machine is dirty, you can use neutral detergents and water to clean it.
- To prevent electrical leakage, do not wash the machine directly with water.
- When the machine is operating, the compressor generates heat; this is a normal condition.
- The machine does not have an explosion-proof function; do not use the machine in flammable or explosive areas.
- When the power cord or plug is damaged, please call the supplier or a qualified electrician for assistance.
- If the machine is used in a dusty environment, please take measures to prevent dust from entering the machine.

FOR ANY INQUIRIES, PLEASE CONTACT OUR CUSTOMER SERVICE CENTER

DeAir

Total Climatech Solution!

Hotline: +84 925 977 579